evoQ$_4$ Electromagnetic Fire Service Meter

Size 3" to 8"



Performance	Inches	3	4	6	8
	mm	80	100	150	200
> 95% Accuracy	GPM	0.6	1.7	4	8
	m3/hr	0.14	0.4	0.9	1.8
*98.5% - 101.5% Accuracy	GPM	2-550	4-880	8-1400	16-3500
	m3/hr	0.5-125	0.9-200	1.8-318	3.6-795
**Maximum flow	GPM	550	880	1400	3500
	m3/hr	125	200	318	795
***Max. operating pressure	psi	230	230	230	230
	Bar	16	16	16	16

* UL listing covers normal flow ranges (98.5 - 101.5% accuracy)
** Typical maximum registered flow. evoQ$_4$ is unaffected by deluge flows delivered for fire services
***UL listing applies to operating pressure of 175psi

Materials

Body	Stainless steel grade 304
Flow tube	Stainless steel grade 316
Liner	Polyethylene epoxy
Electrodes	Stainless steel grade 316
Flanges	Epoxy coated cast iron
Register	Stainless steel with glass lens
Register housing/lid	UV-resistant plastic
Environmental class	IP68 hermetically sealed unit waterproof to 30 ft depth

Features	Benefits
10 year continuous life	No need for costly and time-consuming replacement
No moving parts	Maintenance free
0.5 second sampling rate	Highest accuracy
Wide measuring range	Suitable for all commercial applications
Simple installation	No additional training required
Pulse or encoder connectivity	Pre-equipped or retrofitted for your AMR and telemetry needs
AWWA lay lengths	Simple changeout
IP68 sealed	Provides long trouble-free life
NSF61 Annex G listed	Zero lead contaminants

evoQ$_4$ FSM (Fire Service Meter)

The evoQ$_4$ comes with a full FM Standard 1044 approval and UL SU327B listing for use as a fire service instrument. Replace large mechanical fire service assemblies with an easily fit solid state meter.

Operation

The evoQ$_4$ is a battery powered electromagnetic water meter that is suitable for a wide range of metering applications. Using Faraday's law of Electromagnetic Induction, two magnets provide a magnetic field within the pipe that measures the flow of the conductive water. There is no mechanical assembly that could restrict flows for fire service; without moving parts regular maintenance is also not required. The meter is designed for 10 years of continuous operation with no battery changes necessary. With a sampling rate of 0.5 seconds, the evoQ$_4$ has excellent accuracy over a wide flow range.

Application

The meter is for use with potable cold water up to 120°F. The meter will typically register at ± 0.75% accuracy at normal and high flows and better than 95% accuracy at low flows. Accuracy tests are made before shipment, so no adjustments need to be made before installation. The approval of FM1044 and UL SU327B indicates this meter can be used in lieu of AWWA C703 mechanical fire assemblies.

Pulse or encoder output

The meter can be fitted with a pulse output device that can be attached to a radio transceiver module or a data logger. The pulse output can be programmed in the factory to meet the needs of the utility. For utilities preferring encoded output technologies, an encoder module is available for interface with AMR systems.

Remote display

The meter can be fitted with a remote display. A two channelled output can provide both forward and reverse pulses.

Connections

The evoQ$_4$ comes in AWWA C701 Class II Turbine meter lay lengths. The flanges are epoxy coated cast iron to reduce weight and prevent corrosion. All flanges conform to ANSI B16.1 Class 125 standards. Allow for 5 pipe diameters of straight pipe upstream and 3 pipe diameters of straight pipe downstream for maximum performance. Spool pieces are available to fill typical mechanical FSM assembly lay lengths.

LCD display

Bright, large and easy-to-read LCD display incorporating integrating volume and a reference flow-rate indicator. Alarm functions provide in-situ status ensuring no loss in measuring continuity. An IP68 seal ensures the meter electronics are safely protected providing long-term reliability.

Display functions

A low-battery indicator appears when the battery voltage is closing towards the end of its useful life. A no-water indicator blinks indicating an empty pipe condition such as, no water within the meter. The flow rate is displayed in forward and reverse; if water is flowing in the reverse direction a minus sign is displayed. The net volume of water measured is displayed at all times.

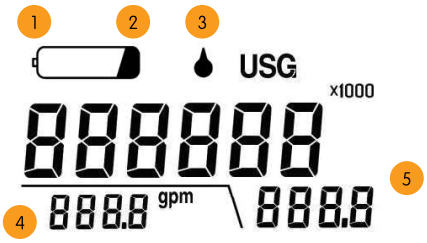

Display functions

1. **Low-Battery** – The indicator blinks when the meter has approximately 3 months working life remaining.
2. **End of Life Battery** – Measurement stopped. The indicator appears permanently when the meter life expires. Data is displayed for up to 9 months.
3. **No-Water** – The indicator blinks when there is an empty pipe condition.
4. **Flow Rate** – If water is flowing in the reverse direction a minus sign is displayed to the left of the value.
5. **Net Volume** – Any reverse flow is subtracted from the volume display. The top line displays billable units with the multiplier shown in upper right corner. Measurement resolution is provided in the lower right for testing.

3" - 4" USG



3" - 4" Cuft

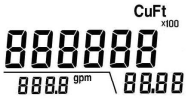

6" - 8" USG



6" - 8" Cuft



Dimensions and net weight

Meter Size	A		B		C		Weight	
	in	(mm)	in	(mm)	in	(mm)	lbs	(kg)
3"	12	(304.8)	12.27	(311.7)	8.52	(216.3)	22.5	(10)
4"	14	(355.6)	13.22	(335.8)	8.72	(221.5)	35.5	(16)
6"	18	(457.2)	15.32	(389.1)	9.82	(249.4)	55.5	(25)
8"	20	(508.0)	17.16	(435.9)	10.71	(272.0)	81.5	(37)

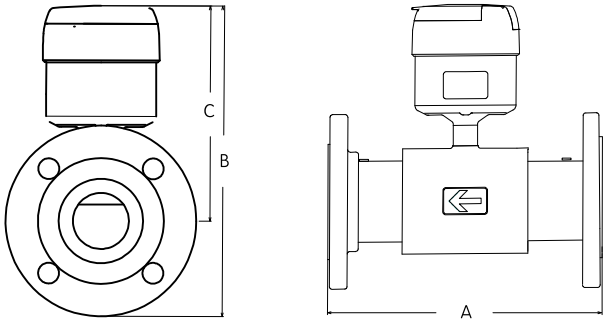

UL LISTED

FM APPROVED

NSF

The company's policy is one of continuous product improvement and the right is reserved to modify the specifications contained herein without notice. These products have been manufactured with current technology and in accordance with applicable AWWA Standards.

Product manufactured by Aichi Tokei Denki Co Ltd.

Lit Ref: evoQ$_4$FSM/05-13